Last name _____ First name _____

Economic Dynamics: Mid-Term Examination	
Prepared by: David Wheat	*Date: 1 November 2018*
Duration: 80 minutes	**Grade: _____**
During the examination the students are required to behave in accordance with the norms of the academic ethics.	

Procedures for taking the exam:

1. As a condition of being allowed to take this exam and having it graded, you must not communicate in any way—including electronic communication— with another person, except the person administering the exam (the 'proctor').

2. If you have questions during the exam, raise your hand to get your proctor's attention. The proctor is only permitted to clarify exam questions or tasks; i.e., what you are required to do. The proctor cannot answer any other questions.

3. You may use <u>one sheet of paper with notes that you produce yourself</u>. Notes can be on both sides of the paper. Put your name on your 'notes' page and turn it in with your exam. No other materials or devices can be on your desk during the exam, but you may have an English dictionary.

4. Be sure to write your name on each page of the exam.

5. Write (or print) legibly. If your answers are difficult to read, they may be read incorrectly and your grade will suffer.

6. There are 3 questions and each question has multiple parts. Be sure to answer everything.

7. **Sign this Honor Pledge**:

I did my own work on this exam. I did not receive help during the exam, and I did not give help to anyone else. I understand that if I sign this pledge falsely, I will not qualify for a passing grade on the exam and I will not qualify for course credit.

_____
signature

Last name _____ First name _____

1. (15 points) Discuss the Phillips Curve.

- Explain its origin and the main findings that made it famous.
- How is the Phillips Curve model used today similar to the original model? How is it different?

Last name _____ First name _____

2. (15 points) Discuss the Taylor Rule.

- Explain its origin and the main findings that made it famous.
- How is the Taylor Rule used in modeling today?
- Write the equation for the Taylor Rule and define the terms in the equation.

Last name _____ First name _____

3. This is a simple model of banking system with a Money Supply that equals Cash plus Deposits. The government's central bank sets the required reserve ratio (RRR), the fraction of bank customers' Deposits that must be kept in Reserves 'Supply' at the central bank. A change in RRR results in a change in required reserves ('reserves demand') and causes an imbalance between reserves supply and demand; and in this simple model equilibrium can only be restored by banks' changing their lending (assuming borrowers cooperate). When banks lend to customers and add to the stock of Loans, they simultaneously add the same amount to the customers' accounts at the banks: the Deposits. Customers must repay the loans after a certain time period ('maturity'). Net lending = lending - repayments. When Deposits change, there is a simultaneous change in banks' Reserves Supply at the central bank. You have two tasks:

Task 3A (50 points). Study this spreadsheet model and translate it to a system dynamics model with a diagram with equations. Study the equations in row 13, which are repeated in each time period thereafter, except for the required reserves ratio (RRR); it is 0.20 initially, but the central bank lowers it to 0.10 during time period 2. This means that beginning in period 2, banks are permitted to keep a lower supply of Reserves and, therefore, can increase lending (assuming there are credit-worthy customers who want to increase their borrowing). In this spreadsheet for Task A, there is no Cash ('cash-to-deposit ratio' = 0); the entire Money Supply consists of Deposits. On page 5, you will see the stocks and flows that you will need in the diagram of system dynamics version of this model. Draw the rest of the diagram and write the equations below the diagram. (No Cash stock is displayed because there is no Cash in Task A.)

	A	B	C	D	E	F	G	H	I	J	K	L	M
1		Task A	Task B	units									
2	cash-to-deposit ratio =	0	0.11	unitless									
3	required reserves ratio =	0.2	0.2	unitless	For both tasks, RRR is reduced to 0.1 in time period 2.								
4	loan maturity (years)=	4	4	years									
5	reserves adj time (years)=	0.25	0.25	years									
6	cash adj time (years)=	0.1	0.1	years									
7	currency stocks (capitalized)			euros (trillions)									
8		The model is in equilibrium during time period 0. For example, deposits = 5 at the end of time 0.											
10				net cash			net chg in	reserves	reserves	Reserves	excess		Money
11	time	Deposits	Cash	withdrawals	lending	repayments	deposits	ratio	demand	Supply	reserves	Loans	Supply
12	0	5.0	0.0	0.0	1.0	1.0	0.0	0.2	1.0	1.0	0.0	4.0	5.0
13	1	5.0	0.0	0.0	1.0	1.0	0.0	0.2	1.0	1.0	0.0	4.0	5.0
14	2	5.0	0.0	0.0	1.0	1.0	0.0	0.1	0.5	1.0	0.5	4.0	5.0
15	3	7.0	0.0	0.0	3.0	1.0	2.0	0.1	0.5	1.0	0.5	6.0	7.0
16	4	8.5	0.0	0.0	3.0	1.5	1.5	0.1	0.7	1.0	0.3	7.5	8.5
17	5	9.3	0.0	0.0	2.7	1.9	0.8	0.1	0.9	1.0	0.2	8.3	9.3
18	6	9.7	0.0	0.0	2.5	2.1	0.4	0.1	0.9	1.0	0.1	8.7	9.7
19	7	9.9	0.0	0.0	2.4	2.2	0.2	0.1	1.0	1.0	0.0	8.9	9.9
20	8	10.0	0.0	0.0	2.3	2.2	0.1	0.1	1.0	1.0	0.0	9.0	10.0
21	9	10.0	0.0	0.0	2.3	2.2	0.0	0.1	1.0	1.0	0.0	9.0	10.0
22	10	10.0	0.0	0.0	2.3	2.2	0.0	0.1	1.0	1.0	0.0	9.0	10.0
23													
24	**row 13 equations:**												
25	Deposits = B12-D13+E13-F13												
26	Cash = C12+D13												
27	net cash withdrawals = C12-B$2*B12												
28	lending = F12+K12/B$5												
29	repayments = L12/B$4												
30	net chg in deposits = E13-F13-D13												
31	reserves ratio = B$3 (changes to B$3-0.1 in row 14)												
32	reserves demand = H13*B12												
33	Reserves Supply =J12+F13-E13+G13												
34	excess reserves = J13-I13												
35	Loans = L12+E13-F13												
36	Money Supply = B13+C13												

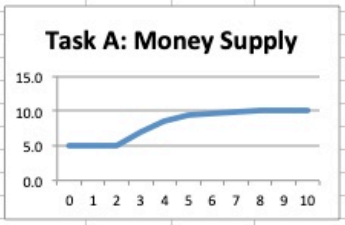

Task 3B (20 points).

(1) The Task B model will add a stock of Cash and a bi-flow of net withdrawals. These bank customers typically divide their money supply this way: 10% in Cash and 90% in Deposits, so the initial values will be 0.5 trillion euros and 4.5 trillion euros, respectively. The equation for net cash withdrawals is the same as in row 13 of the spreadsheet. On page 6, another partial SD diagram is displayed. DO NOT REPEAT THE DIAGRAM OF TASK A. Draw only the new parts needed to show what is different in Task B, and write only the new equations or equations that change in Task B.

(2) Below the diagram, describe the behavior of the Task B model and how it will be different from the Task A model. Explain your reasoning.

Last name _____ First name _____

Task A Model. Draw the rest of the diagram for the model described in Task A. Below, write the equations.

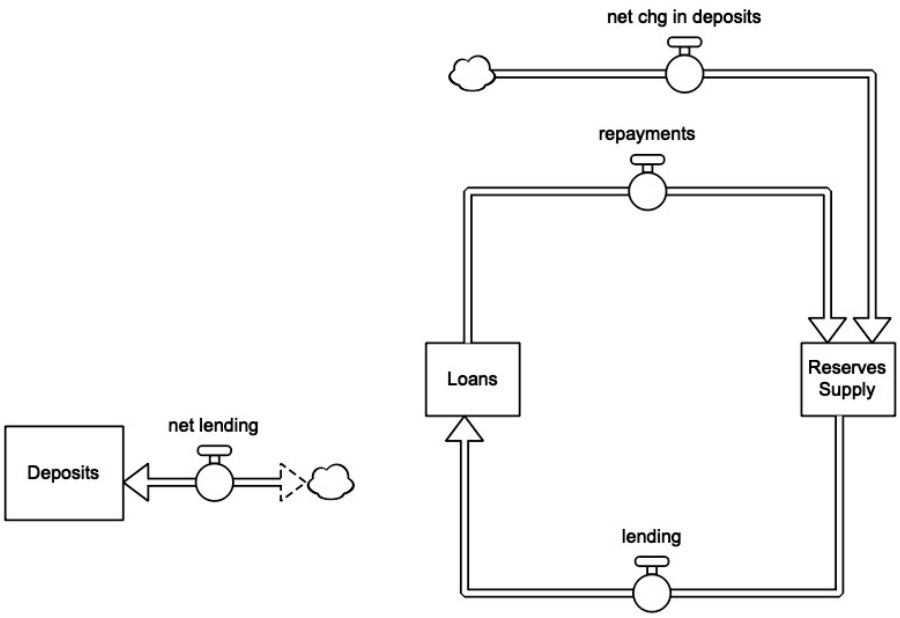

Deposits(t) =

Loans(t) =

Reserves Supply(t) =

lending =

maturity =

repayments =

net lending =

net chg in deposits =

required reserves ratio =

reserves demand =

excess reserves =

reserves adj time =

money supply =

INITIAL Deposits =

INITIAL Loans =

INITIAL Reserves Supply =

Last name _____ First name _____

Task B Model

(1) Draw only the changes required by Task B and write only new equations and equations that change in Task B.

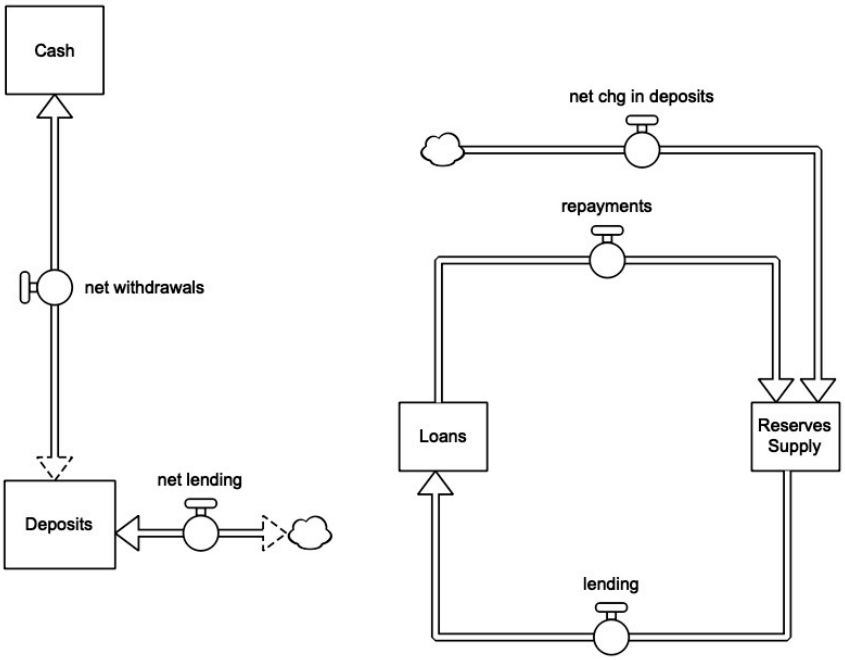

Cash(t) = INITIAL Cash =

net withdrawals =

cash-to-deposit ratio =

desired cash =

cash adj time =

net chg in deposits =

money supply =

---

(2) Describe the behavior you would expect from the Task B model after the reserves ratio is reduced from 0.20 to 0.10. How would it be different from behavior of the Task A model? Explain your reasoning.